Work Order ID 71294

Monday, June 27, 2011 11:33:09 AM

PRELIMINARY ISSUE

Item ID: D4161-1
Revision ID: PRELIM
Item Name: Fitting, Engine Mount Trunnion

Accept

Setup Start
Stop

Start Date: 6/27/2011 **Start Qty:** 3.00
Required Date: 6/30/2011 **Req'd Qty:** 3.00
Reference: 11-06-27

Cust Item ID:
Customer:

POSITIVE RECALL

Run Start
Stop

Approvals: **Process Plan:** _____ **Date:** _____ **Tooling:** _____ **Date:** _____
QC: _____ **Date:** _____ **SPC (Y/N):** _____ **Date:** _____

Draw Nbr	Revision Nbr
D4161	PA1

Sequence ID/ Work Center ID	Operation Description	Set Up/ Run Hours	Tool ID	Tool #	Plan Code	Accept Qty	Reject Qty	Reject Number	Insp. Stamp
100 Doosan Doosan Lathe	DOOSAN LATHE **Memo** 1-Turn as per Dwg 2-Deburr	0.00 0.00				3			
110 QC Quality Control	QC2- Inspect parts off machine FAI/FAIB **Memo**	0.00 0.00				3			
120 HAAS 1 HAAS CNC vertical machine #1	HAAS CNC VERTICAL MACHINING #1 **Memo** 1-Machine as per Dwg D3488□2-Deburr	0.00 0.00				3	Ø		

11-6-28

11-6-28

11-06-20

Work Order ID 71294

Monday, June 27, 2011 11:33:09 AM

Item ID: D4161-1
Revision ID: PRELIM
Item Name: Fitting, Engine Mount Trunnion

Accept

Setup Start
Stop

Start Date: 6/27/2011 **Start Qty:** 3.00
Required Date: 6/30/2011 **Req'd Qty:** 3.00
Reference:

Cust Item ID:
Customer:

Run Start
Stop

Approvals: **Process Plan:** _____ **Date:** _____ **Tooling:** _____ **Date:** _____
QC: _____ **Date:** _____ **SPC (Y/N):** _____ **Date:** _____

Sequence ID/ Work Center ID	Operation Description	Set Up/ Run Hours	Tool ID	Tool #	Plan Code	Accept Qty	Reject Qty	Reject Number	Insp. Stamp
130 QC Quality Control	QC2- Inspect parts off machine FAI/FAIB	0.00	11-06-30			3	Ø		
	Memo	0.00							
140 QC Quality Control	QC8- Inspect parts - second check	0.00	11-06-30			3	Ø		
	Memo	0.00							
200 Packaging Packaging	Identify as per dwg & Stock Location: SHOP RACK 105386	0.00				14/6/30 (2)			
	Memo	0.00							

ENG rack

Picklist Print

Monday, June 27, 2011 11:33:05 AM

Work Order ID: 71294

Parent Item: D4161-1

Parent Item Name: Fitting, Engine Mount Trunnion

Start Date: 6/27/2011 **Required Date:** 6/30/2011

Start Qty: 3.00 **Required Qty:** 3.00

Comments: IPP REV:A NEW ISSUE 11-06-27 JLM VERIFIED BY:EC

Component Item ID/ Item Name	Replacement Item ID	Mfg/ Purch	Bin Item	Primary Location	Last Location	Route Seq ID	Unit of Measure	Qty on Hand	Qty per Kit	Total Qty	Qty Issued	Date Issued	Status
D6104-001 Round Billet, 17-4		Manufactured	No				Each	20.0000		3 29	11.6.28		

Location	Loc Qty	Loc Code
MAT043	20	
53749	20	

POSITIVE RECALL
EFFECTIVE 11/6/29 AUTH
RELEASED _____ DATE _____

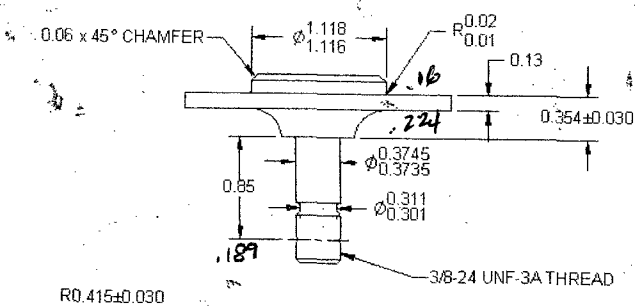

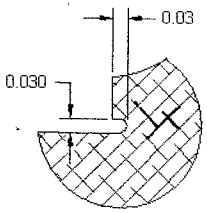

DETAIL B
SCALE 4X C2-1

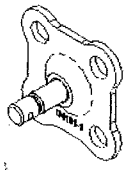

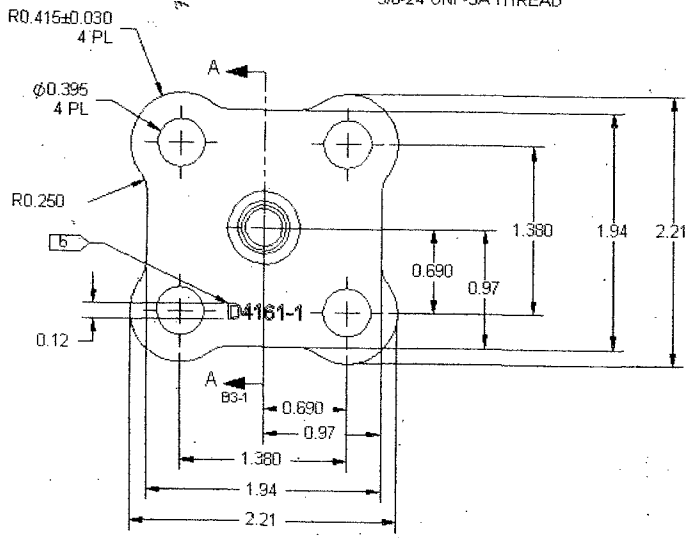

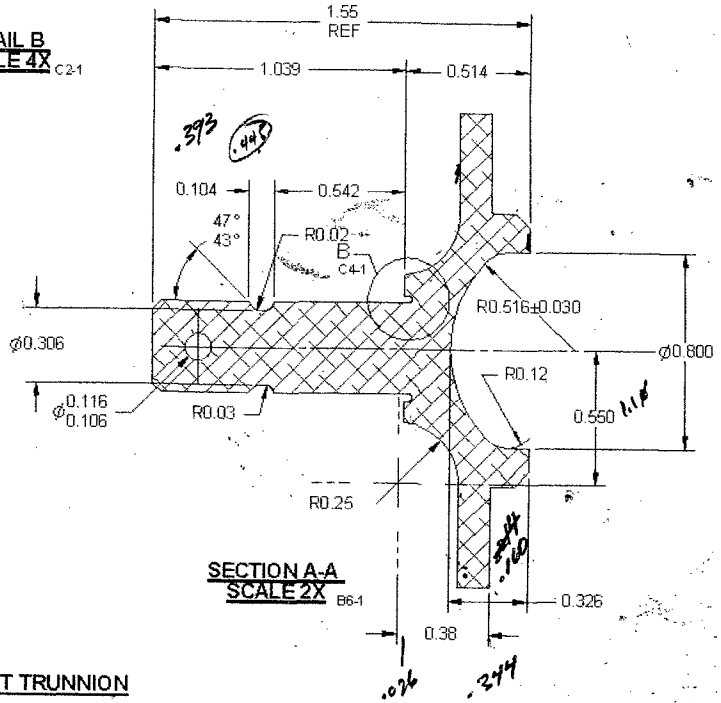

SECTION A-A
SCALE 2X B6-1

D4161-1 FITTING, ENGINE MOUNT TRUNNION

NOTES:
1) MATERIAL: 17-4PH STAINLESS STEEL BAR, H900 CONDITION
PER AMS 5604/5643
REF DART SPEC M17-4-B
2) FINISH: N/A
3) TOLERANCES: PER DART QSI 018 UNLESS OTHERWISE NOTED
4) UNITS: INCHES UNLESS OTHERWISE NOTED
5) BREAK SHARP EDGES: 0.005 TO 0.010 MAX
6) IDENTIFICATION: IDENTIFY PER DART QSI 044 6.3 AS SHOWN
7) WEIGHT: 0.21 lbs
8) PENETRANT INSPECT

PRELIMINARY ISSUE
10.07.20

REV.	DESCRIPTION	BY	DATE
PA1	NEW ISSUE		10.07.20

DESIGN	
DRAWN	
CHECKED	
MFG. APPR.	
APPROVED	
DE APPR.	
DATE	10.07.20

DART AEROSPACE LTD
HAWKESBURY, ONTARIO, CANADA

DRAWING NO. D4161 — REV. PA1 — SHEET 1 OF 1

TITLE: FITTING, ENG MT TRUNNION — SCALE: NTS

COPYRIGHT © 2010 BY DART AEROSPACE LTD
THIS DOCUMENT IS PROPRIETARY AND CONFIDENTIAL AND IS SUPPLIED ON THE EXPRESS CONDITION THAT ITS NOT TO BE USED FOR ANY PURPOSE OR COPIED OR COMMUNICATED TO ANY OTHER PERSON WITHOUT WRITTEN PERMISSION FROM DART AEROSPACE LTD.

DART AEROSPACE LTD	Work Order:	712914
Description: Engine mount trunnion	Part Number:	D 4161
Inspection Dwg: Rev: PA-2		Page 1 of 1

FIRST ARTICLE INSPECTION CHECKLIST TURNED Section

Drawing Dimension	Tolerance	Actual Dimension	Accept	Reject	Method of Inspection	Comments
.06 x 45°	+/- .030	.060	✓		RQ.02	
1.118	1.116	.118	✓			
R.02	R.01	R.015	✓			
.13	+/- .030	.134	✓			
.354	+/- .030	.354	✓			
.3745	.3735	.3737	✓			
.85	+/- .030	.849	✓			
.311	.301	.306	✓			
3/8-24 UNF	3A	3A	✓			
Major Ø .3750	.3678	.371	✓		RQ.06	
MOW .3988	.3959	.3980	✓		"	
.03	+/- .030					omit for prototype only
.030	+/- .010					"
1.55	+/- .030	1.553	✓		RQ.02	
1.039	+/- .010	1.039	✓			
.514	+/- .010	.515	✓			
.104	+/- .010	.100	✓			
.542	+/- .010	.542	✓			
R.02	+/- .030	R.020	✓			
.116	.106	.107	✓			
R.03	+/- .030	R.030	✓			
R.25	+/- .030	R.265	✓			
.550	+/- .010	.550	✓			

Measured by:	RQ	Audited by:	DFS	Preliminary Approval:	
Date:	11-6-28	Date:	11/06/30	Date:	

Rev	Date	Change	Revised by	Approved
E	10.04.14	Added preliminary approval	KJ	

10.04.15

DART AEROSPACE LTD	Work Order:	71294
Description: Cutting	Part Number:	D4161-1
Inspection Dwg: Rev:		Page 1 of 1

Mill Section

FIRST ARTICLE INSPECTION CHECKLIST

Drawing Dimension	Tolerance	Actual Dimension	Accept	Reject	Method of Inspection	Comments
2.21 ↔	+/-030	2.210	✓		A.MVG	
2.210 ↕	+/-030	2.210	✓			
1.380	+/-005 ↔	1.379	✓			
1.380	+/-005 ↕	1.378	✓			
1.94	+/-030	1.941	✓			
1.94	+/-030	1.941	✓			
Ø.395	+.005 -.001	Ø.399	✓			

Measured by:		Audited by:	11/06/30	Preliminary Approval:	
Date:	11-06	Date:		Date:	

Rev	Date	Change	Revised by	Approved
E	10.04.14	Added preliminary approval	KJ	

10.04.15

DART AEROSPACE LTD	Work Order:	71294
Description: Engine mount trunnion	Part Number:	D 4161
Inspection Dwg: Rev: PA-2		Page 1 of 1

FIRST ARTICLE INSPECTION CHECKLIST

Drawing Dimension	Tolerance	Actual Dimension	Accept	Reject	Method of Inspection	Comments
.06 x 45°	+/- .030	.060	✓		RG.02	
1.118	1.116	.118	✓			
R.02	R.01	R.015	✓			
.13	+/- .030	.134	✓			
.354	+/- .030	.354	✓			
.3745	.3735	.3737	✓			
.85	+/- .030	.849	✓			
.311	.301	.306	✓			
3/8-24 UNF	3A	3A	✓			
.375°	.3678	.371	✓		RG.06	
.3988	.3959	.398°	✓		"	
.03	+/- .030					omit for prototype only
.030	+/- .010					"
1.55	+/- .030	1.553	✓		RG.02	
1.039	+/- .010	1.039	✓			
.514	+/- .010	.515	✓			
.104	+/- .010	.100	✓			
.542	+/- .010	.542	✓			
R.02	+/- .030	R.020	✓			
.116	.106	.107	✓			
R.03	+/- .030	R.030	✓			
R.25	+/- .030	R.265	✓			
.550	+/- .010	.550	✓			

Major Ø M10 W

Measured by:	RG
Date:	11-6-28

Audited by:	DFS
Date:	11/06/30

Preliminary Approval:	
Date:	

Rev	Date	Change	Revised by	Approved
E	10.04.14	Added preliminary approval	KJ	

10.04.15

From: Harvey Siemens <hsiemens@dartaero.com>
Sent: June 27, 2011 10:23 AM
To: Jean-Luc Menard
Subject: D4165

JL

It is acceptable for the material for the D4161-1 part to be in any heat treat condition and for the 0.030 groove to be missing from the first 2 parts produced.

Regards,

Harvey Siemens

Mechanical Designer
DART Aerospace Ltd.

P: 403-717-0328
F: 403-717-1288
E: hsiemens@dartaero.com
W: www.dartaero.com
M: 1060 McTavish Road NE, Calgary, Alberta, T2E 7G6

The information contained in this transmission is privileged and confidential and intended only for the use of the individual or entity to whom it is addressed. If you are not the intended recipient, you are hereby notified that any distribution, copying, disclosure or taking of any action in reliance on the contents of this transmission is strictly prohibited and review by any individual other than the intended recipient shall not constitute waiver of privilege. If you have received this transmission in error, please notify me immediately and delete the original transmission.